AZUM017

HEAT NO.	NO.	ITEM	MATERIAL	SIZE 1	SIZE 2	THICKNESS 1	THICKNESS 2	TYPE	Q'TY (MM,EA)	WEIGHT (KG) UNIT(M,EA)	WEIGHT (KG) TOTAL	REMARK
	1	PIPE-SMLS	A312-TP316L	1 1/2"		S/40S			5700	4.1	23.4	-
	2	PIPE-SMLS	A312-TP316L	1 1/2"		S/40S			4013	4.1	16.5	-
	6	FULL COUPLING	A182-F316L	1 1/2"		CL3000		SW	2	0.5	1.0	-
										TOTAL W.T (KG)	40.9	END TO END (MM) 9745

PREHEAT CHECK(Min. °C)

Dimensional & Visual Inspection

☐ Accept ☐ Reject

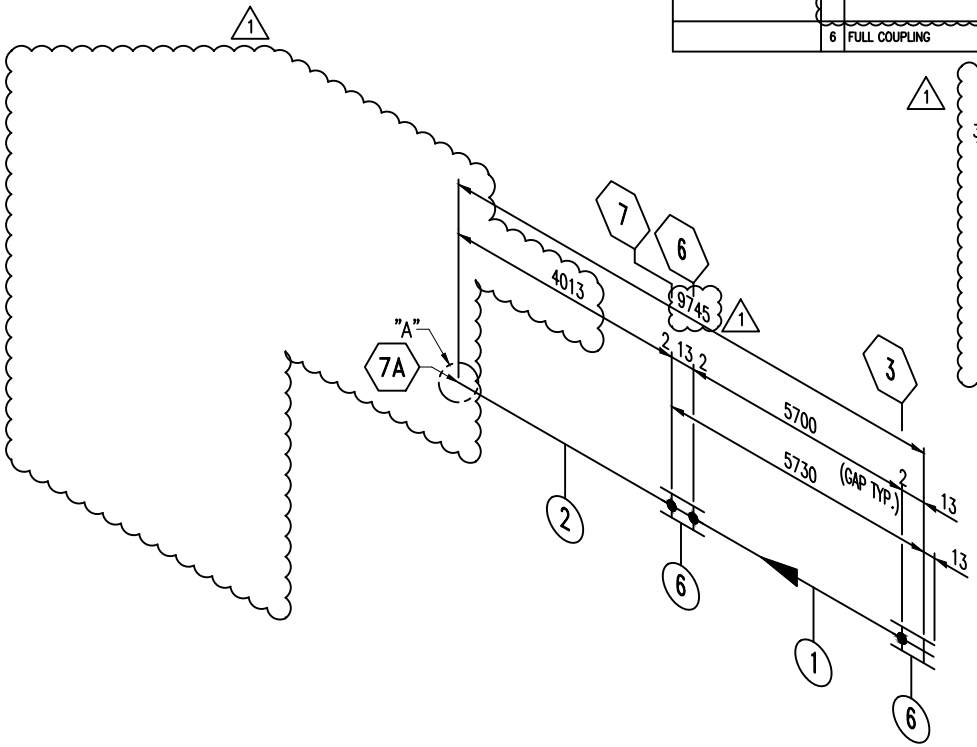

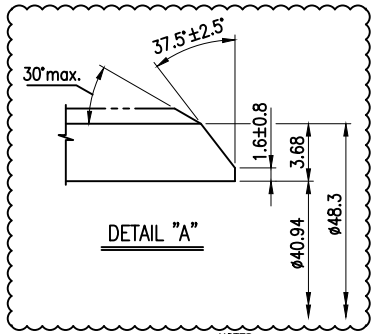

NOTES
1. SEE FABRICATION STANDARD DOCUMENT NO.AZU-FAB-STD-001 FOR SPOOL FABRICATION.
2. ALL DIMENSIONS ARE IN MILLIMETERS UNLESS OTHERWISE SPECIFIED.
3. ALL BUTTWELDINGS AND O-LET WELDINGS ARE FULL PENETRATION WELD.
4. FFW=FIELD FITTED WELD
5. ⊕ : ORIENTATION OF LONGITUDINAL WELD SEAM FOR WELDED PIPE

REV.	DATE	DESCRIPTION	PREPARED	CHECKED	REVIEWED	APPROVED
1	2025.03.13	REVISED AS PER MARKED	J.G.LIM	J.S.KIM	G.J.KANG	G.H.CHO
0	2024.12.10	FIRST ISSUE	J.G.LIM	J.S.KIM	G.J.KANG	G.H.CHO

APPLICABLE CODE		ASME B31.1(2022)	CODE JURISDICTION	NBEP
DESIGN	PRESS.	12 bar (g)	INSULATION(Y/N)	N
	TEMP.	60 °C	END BEVEL TYPE	PLAIN END
COATING		26-21-00-PRO-MM-0802-001	STAMP(Y/N)	N
HYDROSTATIC TEST(Y/N)		N	TEST PRESSURE	- bar (g)

WELD TABLE					NDE TABLE									
JOINT NO.	MAT'L	SIZE	THK.	WELD TYPE	RT	UT	MT	PT	VT	HT	PMI	PWHT (Y/N)	WPS NO.	REMARK
3	SUS	1.5"	4.01T	SW	-	-	-	-	100%	-	-	N	SH-0808-GT-02	-
6	SUS	1.5"	4.01T	SW	-	-	-	-	100%	-	-	N	SH-0808-GT-02	-
7	SUS	1.5"	4.01T	SW	-	-	-	-	100%	-	-	N	SH-0808-GT-02	-
7A	SUS	1.5"	3.68T	BW	-	100%	-	-	100%	-	-	N	SH-0808-GT-02	SKID

EXPLANATION FOR WELD TABLE AND NDE TABLE
RT=RADIOGRAPHIC EXAMINATION, UT=ULTRASONIC EXAMINATION, MT=MAGNETIC PARTICLE EXAMINATION, PT=LIQUID PENETRATION EXAMINATION, VT=VISUAL EXAMINATION, HT=HARDNESS TESTING, PMI=POSITIVE MATERIAL IDENTIFICATION,**.*T: NOMINAL WALL THK., M**.*: MINIMUM WALL THK.
WELD TYPE: BW=BUTT WELD, O-LET= BRANCH WELD(WELDOLET, SOCKOLET, ...), SW=SOCKET WELD, GW=GROOVED(OR W/ FILLET) WELD, FIL=FILLET WELD, SEAL=SEAL WELD, TACK=TACK WELD, THRD=THREADED JOINT, HOLE= HOLE WITHOUT WELDING(RT HOLE, ...), - = NO MAIN WELDING

PARTS	A	MAT'L INSP.(M/K,C/T)	B	FIT-UP	C	WELDING	D	PWHT	E	NDE	F	FINAL INSP.
PD	H		H		H		H				H	
QC	H		H		H		H		H		H	
CUSTOMER												
RECORD NO.												

Project: UTE Azulão 950 MW

Customer: elecnor

Manufacturer: SEONGHWA

Title: PREFABRICATED PIPE SPOOL DRAWING SERVICE AND INSTRUMENT AIR SYSTEM

FAB. ISOMETRIC DRAWING NUMBER	00QFB10BR001_UAY00Y-B1	SCALE	NONE
		SHEET	1/1
SPOOL DRAWING NUMBER	00QFB10BR001_UAY00Y-B1_SP-002	SERIAL NUMBER	AZUM017

A4 (210 x 297mm/mm)